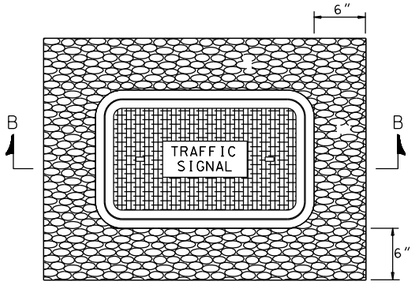

PLAN

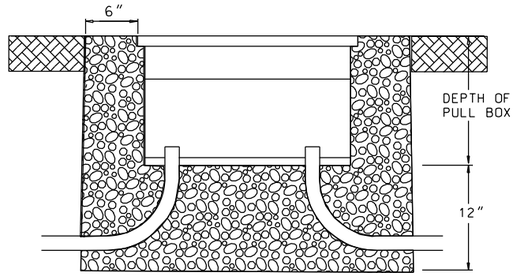

SECTION B-B

TRAFFIC SIGNAL PULL BOX DETAILS

REFER TO TDOT'S QUALITY PRODUCTS LIST (QPL) FOR APPROVED PULL BOXES.

PULL BOX NOTES:

1. GRAVEL, 12" DEEP, IS REQUIRED UNDER PULL BOXES FOR DRAINAGE.
2. TRAFFIC SIGNAL, TRAFFIC OR SIGNAL LEGEND REQUIRED.
3. COVERS SHALL BOLT DOWN.
4. PULL BOXES AND COVERS SHALL MEET TIER 15 REQUIREMENTS PER ANSI/SCTE 77 2002 STANDARDS.
5. TYPE A PULL BOXES TO BE USED FOR SPLICING LOOP LEAD IN WIRES TO SHIELDED CABLE ONLY.

   TYPE B PULL BOXES TO BE USED FOR ALL OTHER TRAFFIC SIGNAL APPLICATIONS.
6. RIGID CONDUIT TO BE GROUNDED WITH NO. 6 SOLID BARE COPPER WIRE ATTACHED TO GROUNDING BUSHINGS IN PULL BOX.

TYPE	MIN. DIMENSIONS		
	LENGTH	WIDTH	DEPTH
A	12"	12"	6"
B	28"	16"	12"

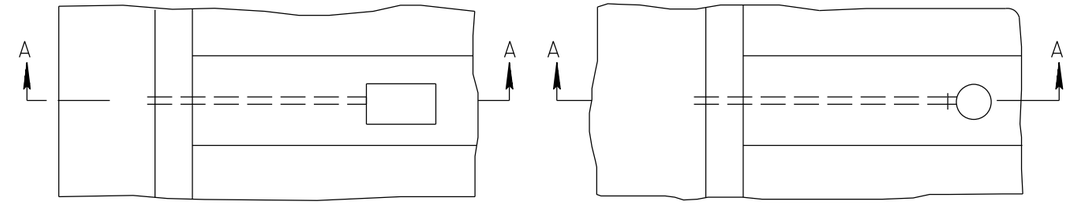

UNDERGROUND INSTALLATION (CURB)
PLAN VIEW

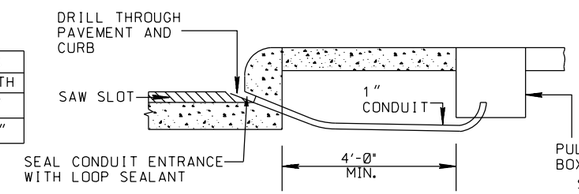

UNDERGROUND INSTALLATION (CURB)
SECTION A-A

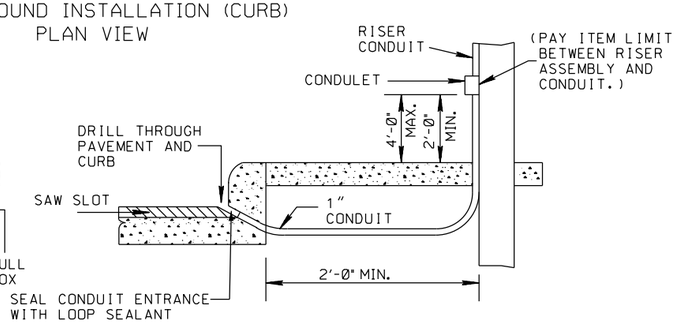

OVERHEAD INSTALLATION (CURB)
SECTION A-A

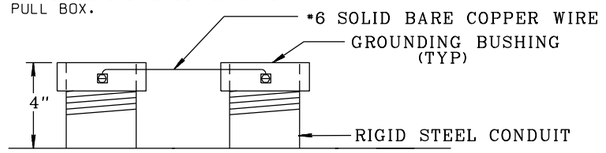

TYPICAL RIGID CONDUIT GROUNDING DETAIL

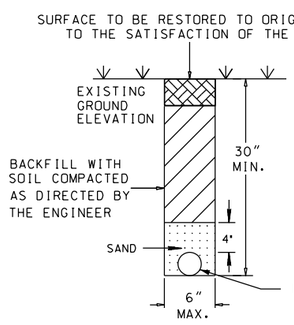

NON-PAVED AREA

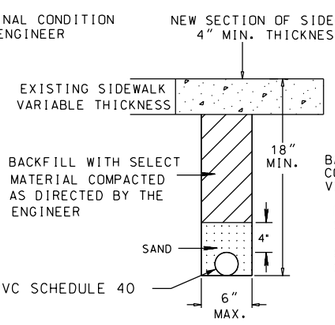

SIDEWALK

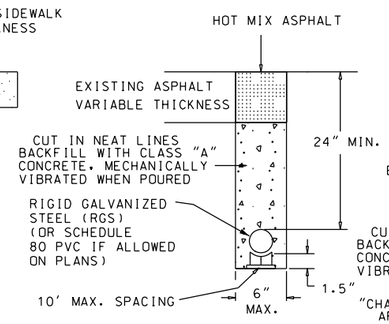

ASPHALT

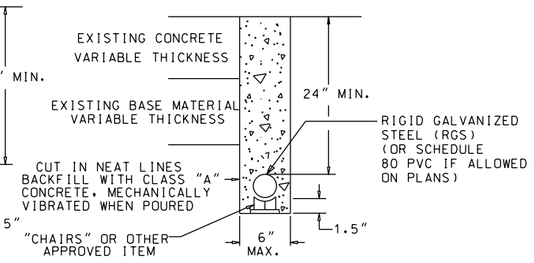

CONCRETE

CONDUIT TRENCHING DETAIL

CONDUIT NOTES:

1. CONDUIT TO BE SEALED WITH DUCT SEALER ONCE CABLE IS INSTALLED.
2. SAWCUT SIDEWALK AT EXISTING JOINTS AND REPLACE ENTIRE SECTION TO MATCH EXISTING MATERIAL. WHEN NEW SIDEWALK IS BEING CONSTRUCTED, CONDUIT, PULL BOX, AND POLE ARE TO BE INSTALLED BEFORE SIDEWALK IS POURED.
3. CONDUIT MAY BE TRENCHED OR JACKED. ELECTRICAL SUBCONTRACTOR SHALL COORDINATE CONDUIT INSTALLATION WORK UNDER ROADWAY WITH ROADWAY CONSTRUCTION PHASING IN ORDER TO MINIMIZE JACKING.
4. ALL CONDUIT SHALL USE LARGE SWEEP RADIUS BENDS (MINIMUM RADIUS 6").
5. TYPE 2 WARNING TAPE IS TO BE INSTALLED IN ALL TRENCHES.

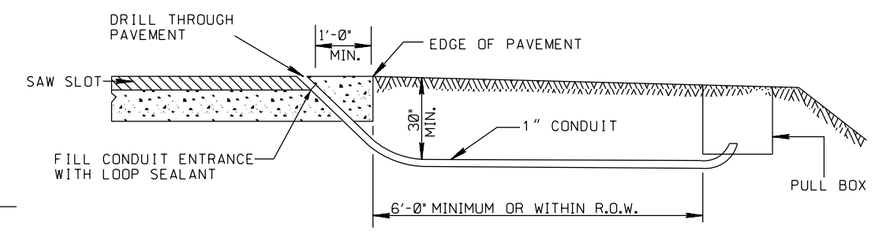

UNDERGROUND INSTALLATION (NO CURB)

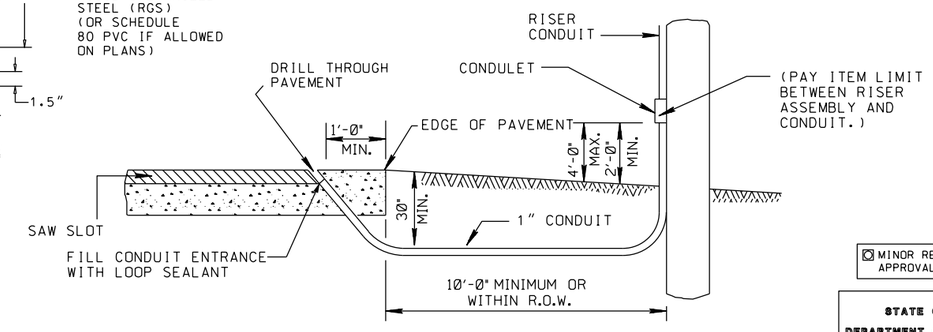

OVERHEAD INSTALLATION (NO CURB)

TYPICAL INSTALLATIONS FOR LOOP LEAD-INS

REV. 1-25-72: ADDED PAY ITEM LIMIT BETWEEN RISER ASSEMBLY AND CONDUIT.

REV. 6-7-72: REMOVED "J" HOOKS AND WIRE LOOPS FROM PULL BOX.

REV. 7-1-72: CHANGED DEPARTMENT NAME.

REV. 1-1-76: CHANGED DRAWING NO. FROM TR-S-2 TO T-SG-2.

REV. 4-12-85: CORRECTED DIMENSION ON PULL BOX FRAME TO 1'-10".

REV. 8-22-91: CORRECTED WEIGHT OF EXTRA HEAVY COVER TO 54 LBS.

REV. 4-15-96: REDREW SHEET, REORGANIZED SHEET AND UPDATED TO 1996 STANDARDS.

REV. 12-16-03: REVISED PULL BOX DIMENSIONS, DRAWING AND NOTES, ADDED CONDUIT DETAILS AND NOTES, AND REVISED SHEET TITLE.

REV. 7-29-04: CHANGED SHEET NAME. ADDED TRAFFIC SIGNAL PULL BOX DETAILS, TRAFFIC RIGID CONDUIT GROUNDING DETAIL, AND CONDUIT TRENCHING DETAIL.

REV. 6-27-16: REVISED TRAFFIC SIGNAL PULL BOX DETAILS HEADING. CORRECTED SPELLING ERRORS THROUGHOUT THE SHEET.

MINOR REVISION -- FHWA APPROVAL NOT REQUIRED.

STATE OF TENNESSEE
DEPARTMENT OF TRANSPORTATION

LOOP LEAD-INS, CONDUIT AND PULL BOXES

JAN 1970 | T-SG-2

$$$